DocuSign Envelope ID: D25BF417-50CB-4E3D-B866-D685803946CC

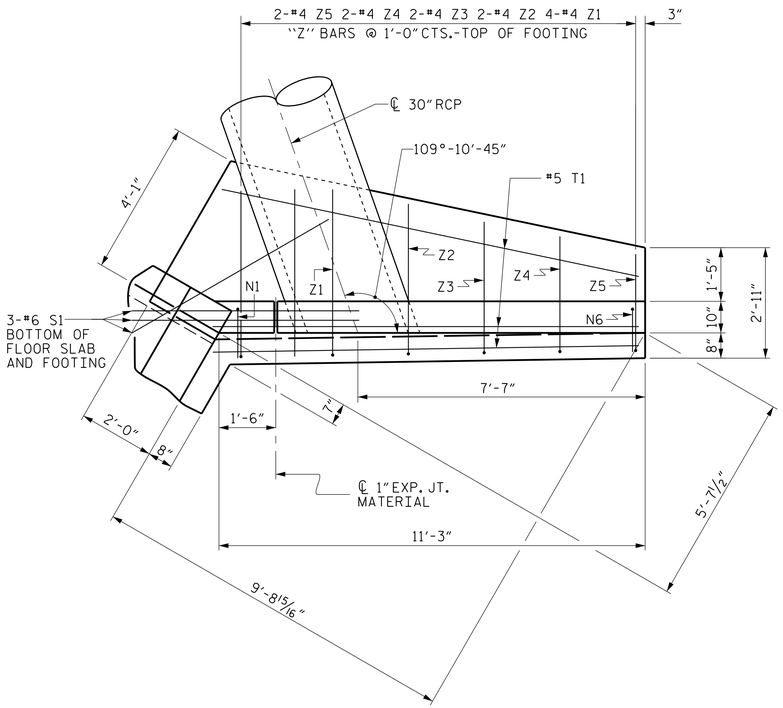

PLAN (W3)

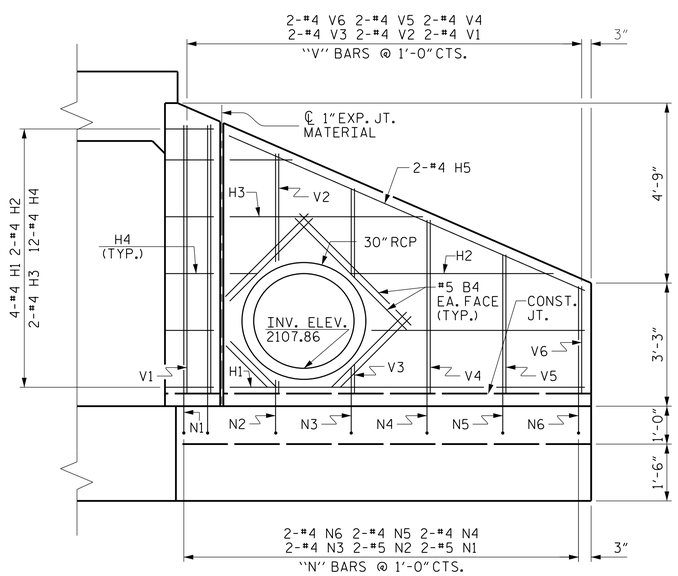

ELEVATION (W3)

BAR TYPES FOR BOX CULVERT

ALL BAR DIMENSIONS ARE OUT TO OUT.

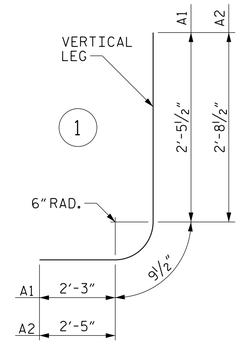

BILL OF MATERIAL FOR BOX CULVERT

BAR	NO.	SIZE	TYPE	LENGTH	WEIGHT
A100	480	#6	STR	10'-11"	7870
A200	482	#6	STR	10'-11"	7903
A1	960	#5	1	5'-6"	5507
A2	960	#6	1	5'-11"	8531
B1	560	#4	STR	8'-1"	3024
B2	960	#5	STR	6'-0"	6008
B3	16	#5	STR	3'-8"	61
C1	400	#4	STR	29'-2"	7793
D1	10	#6	STR	1'-4"	20
D2	10	#6	STR	1'-10"	28
G1	4	#4	STR	11'-0"	29
S2	12	#8	STR	11'-0"	352

TOTAL REINFORCING STEEL 47126 LBS

BAR TYPES FOR WINGS

ALL BAR DIMENSIONS ARE OUT TO OUT.

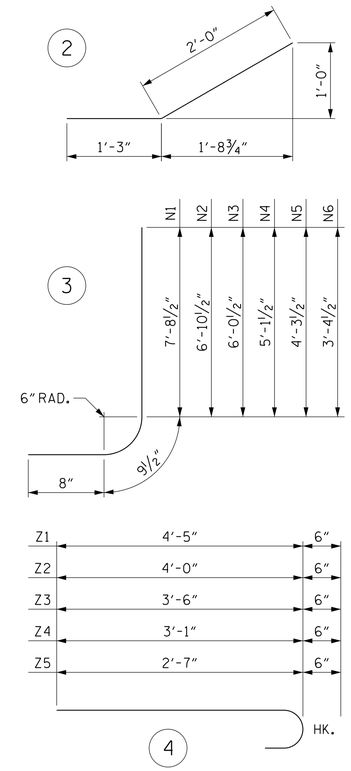

BILL OF MATERIAL FOR WINGS

BAR	NO.	SIZE	TYPE	LENGTH	WEIGHT
B4	16	#5	STR	5'-2"	86
H1	16	#4	STR	9'-4"	100
H2	8	#4	STR	8'-6"	45
H3	8	#4	STR	5'-1"	27
H4	48	#4	2	3'-3"	104
H5	8	#4	STR	10'-3"	55
N1	8	#5	3	9'-2"	76
N2	8	#5	3	8'-4"	70
N3	8	#4	3	7'-6"	40
N4	8	#4	3	6'-7"	35
N5	8	#4	3	5'-9"	31
N6	8	#4	3	4'-10"	26
S1	12	#6	STR	6'-0"	108
T1	12	#5	STR	11'-3"	141
V1	8	#4	STR	7'-1"	38
V2	8	#4	STR	6'-4"	34
V3	8	#4	STR	5'-5"	29
V4	8	#4	STR	4'-7"	24
V5	8	#4	STR	3'-8"	20
V6	8	#4	STR	2'-10"	15
Z1	16	#4	4	4'-11"	53
Z2	8	#4	4	4'-6"	24
Z3	8	#4	4	4'-0"	21
Z4	8	#4	4	3'-7"	19
Z5	8	#4	4	3'-1"	16

TOTAL REINFORCING STEEL FOR 4 WINGS 1237 LBS

CLASS A CONCRETE

4 WINGS	18.7	CY
2 HEADWALLS	1.1	CY
2 END CURTAIN WALLS	1.6	CY
SILLS & BAFFLES	2.3	CY
TOTAL	23.7	CY

NOTE:

CUT REINFORCING AS NECESSARY TO PROVIDE 2" MIN. CLEARANCE TO 30" RCP & TO CONST. JOINTS.

THE 30" Ø PIPE THROUGH THE WING WALL SHALL BE LOCATED BY THE ENGINEER.

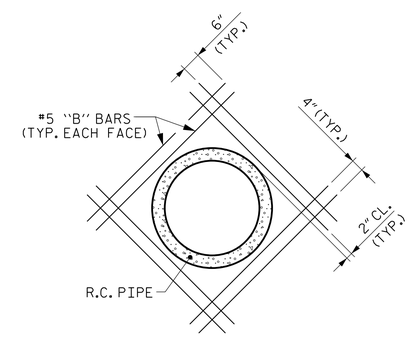

DETAIL OF REINFORCING AROUND PIPES

SPLICE LENGTH CHART

BAR	SIZE	SPLICE LENGTH
B1	#4	1'-9"
C1	#4	1'-11"

PROJECT NO. U-5105

HENDERSON COUNTY

STATION: 21+17.00 -L-

SHEET 6 OF 7

STATE OF NORTH CAROLINA
DEPARTMENT OF TRANSPORTATION
RALEIGH

SINGLE 10 FT. X 7 FT. CONCRETE BOX CULVERT 106° SKEW

NORTH CAROLINA PROFESSIONAL SEAL 034864 ENGINEER L. KEVIN AUSTIN

DocuSigned by: L. Kevin Austin
C2F7B372B4C4B8...
2/27/2018

PLANS PREPARED BY:

CALYX ENGINEERS + CONSULTANTS
6750 TRYON ROAD
CARY, NC 27518
phone: 919.851.1912
CALYXengineers.com
NC License # F-1333

DOCUMENT NOT CONSIDERED FINAL UNLESS ALL SIGNATURES COMPLETED

REVISIONS							SHEET NO.
NO.	BY:	DATE:	NO.	BY:	DATE:		C-6
1			3				TOTAL SHEETS
2			4				7

DRAWN BY :	W. B. ALLEN	DATE :	1/17
CHECKED BY :	Z. H. BROWN	DATE :	2/17
DESIGN ENGINEER OF RECORD:	L. K. AUSTIN	DATE :	2/17

2/15/2018 11:33:35 AM R:\Structures\U-5105_SMU_CU_06.dgn