DocuSign Envelope ID: D25BF417-50CB-4E3D-B866-D685803946CC

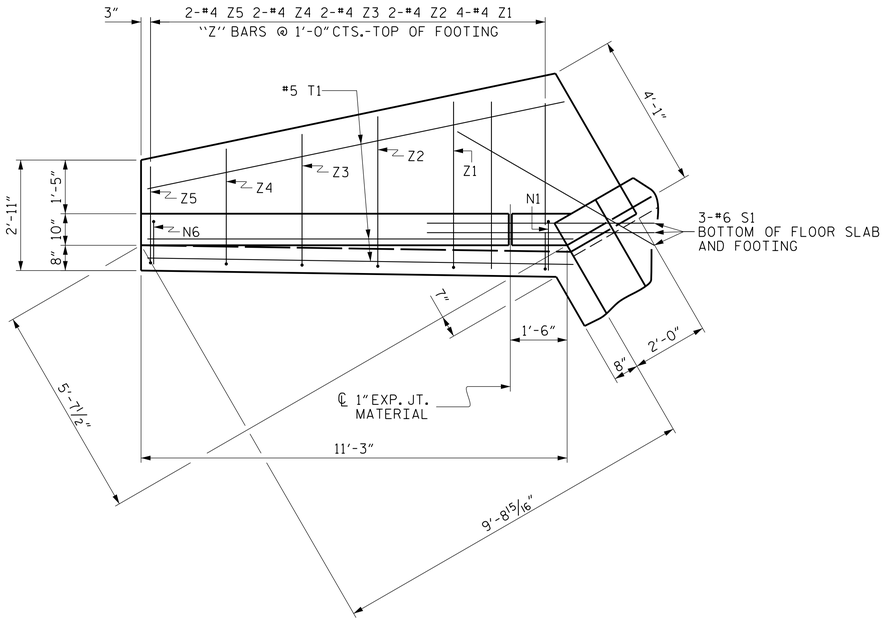

PLAN (W1)

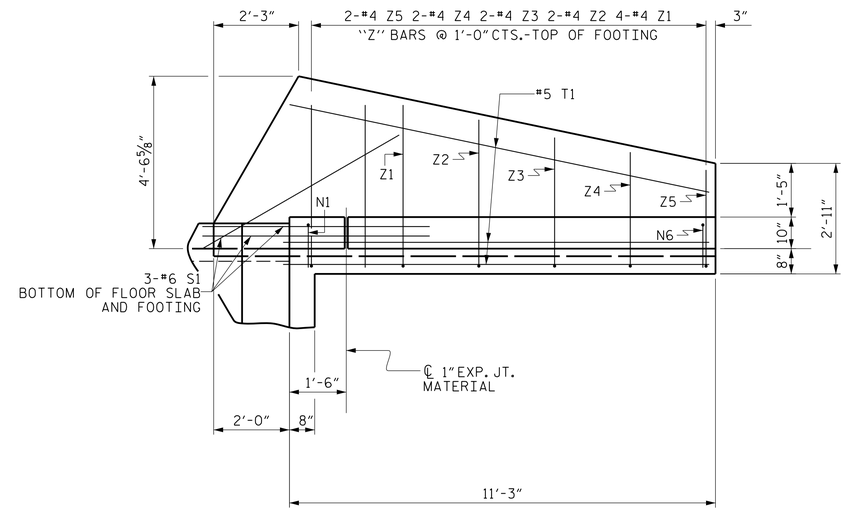

PLAN (W2)

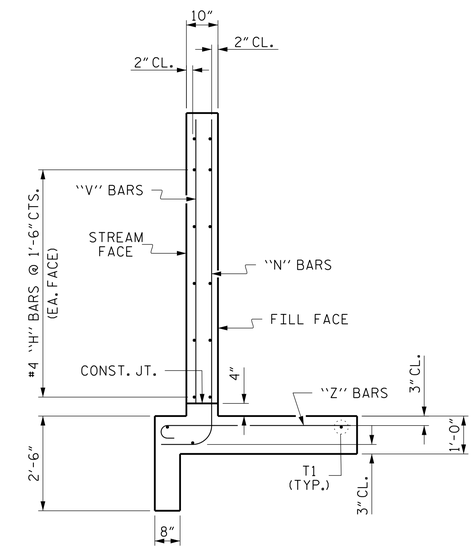

TYPICAL WING SECTION

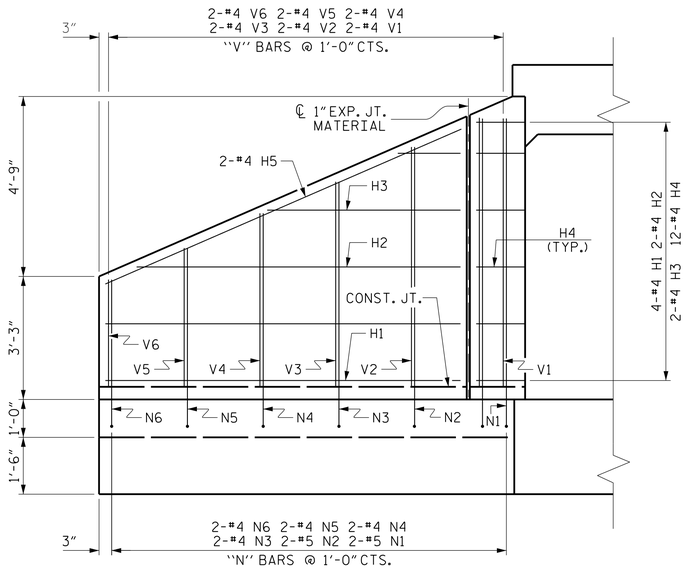

ELEVATION (W1)

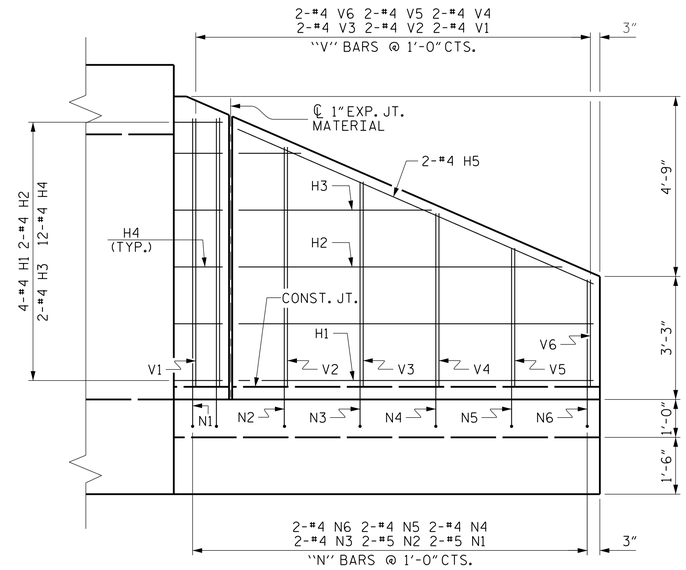

ELEVATION (W2)

PROJECT NO. U-5105

HENDERSON COUNTY

STATION: 21+17.00 -L-

SHEET 5 OF 7

STATE OF NORTH CAROLINA
DEPARTMENT OF TRANSPORTATION
RALEIGH

STANDARD WINGS FOR CONCRETE BOX CULVERT

H = 7'-0" SLOPE = 2:1

90° SKEW

NORTH CAROLINA PROFESSIONAL SEAL 029783 ENGINEER KEVIN AUSTIN
DocuSigned by: Kevin Austin
2/27/2018

PLANS PREPARED BY:

CALYX
ENGINEERS + CONSULTANTS
6750 TRYON ROAD
CARY, NC 27518
phone: 919.851.1912
CALYXengineers.com
NC License # F-1333

DOCUMENT NOT CONSIDERED FINAL UNLESS ALL SIGNATURES COMPLETED

REVISIONS						SHEET NO.
NO.	BY:	DATE:	NO.	BY:	DATE:	C-5
1			3			TOTAL SHEETS
2			4			7

STD. NO. CW9007

ASSEMBLED BY : W. B. ALLEN	DATE : 1/17	
CHECKED BY : Z. H. BROWN	DATE : 2/17	
DRAWN BY : CCJ	10/99	
CHECKED BY : RWW	03/00	

2/15/2018 11:33:31 AM R:\Structures\U-5105_SMU_CU_05.dgn