DocuSign Envelope ID: D25BF417-50CB-4E3D-B866-D685803946CC

BM#2: 8" SPIKE SET IN ROOT OF 20" POPLAR, STA. 21+54.76 -L- 78.22' RT.
ELEV. 2117.42

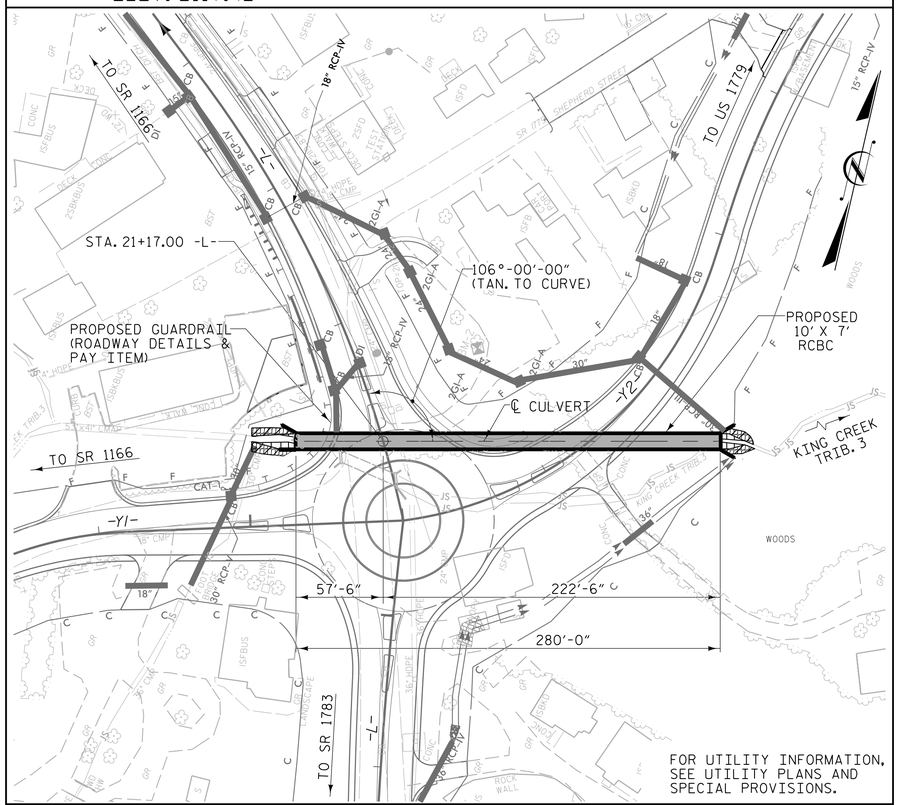

LOCATION SKETCH

GRADE DATA

GRADE POINT ELEV. @ STA. 21+17.00 -L- = 2120.18
BED ELEV. @ STA. 21+17.00 -L- = 2108.72
ROADWAY SLOPES 2:1

HYDRAULIC DATA

DESIGN DISCHARGE = 500 C.F.S.
FREQUENCY OF DESIGN FLOOD = 50 YRS.
DESIGN HIGH WATER ELEVATION = 2117.8 FT
DRAINAGE AREA = 0.33 SQ. MI.
BASE DISCHARGE (Q100) = 600 C.F.S.
BASE HIGH WATER ELEVATION = 2119.99 FT

OVERTOPPING FLOOD DATA

OVERTOPPING DISCHARGE = 705 C.F.S
FREQUENCY OF OVERTOPPING FLOOD = 100+ YRS.
OVERTOPPING FLOOD ELEVATION = 2120.3 FT

PROPOSED OVETOPPING OCCURS AT STA. 21+93 -L-

TOTAL STRUCTURE QUANTITIES

CLASS A CONCRETE			
BARREL @ 1.014 CY/FT	284.0	C.Y.	
WINGS, SILLS, ETC.	23.7	C.Y.	
TOTAL	307.7	C.Y.	
REINFORCING STEEL			
BARREL	47126	LBS.	
WINGS ETC.	1237	LBS.	
TOTAL	48363	LBS.	
CULVERT EXCAVATION STA. 21+17.00 -L-			LUMP SUM
FOUNDATION COND. MAT'L.			303 TONS
REMOVAL OF EXISTING STRUCTURE			LUMP SUM
NATIVE MATERIAL			140 TONS

I HEREBY CERTIFY THESE PLANS
ARE THE AS-BUILT PLANS

NOTES

ASSUMED LIVE LOAD ----------HL-93 OR ALTERNATE LOADING.

DESIGN FILL -L- ---------- 3.50'

DESIGN FILL -Y2- ---------- 6.60'

FOR OTHER DESIGN DATA AND NOTES SEE STANDARD NOTE SHEET.

3" Ø WEEP HOLES INDICATED TO BE IN ACCORDANCE WITH THE SPECIFICATIONS.

CONCRETE IN CULVERTS TO BE POURED IN THE FOLLOWING ORDER:

1. WING FOOTINGS AND FLOOR SLAB INCLUDING 4" OF ALL VERTICAL WALLS.
2. THE REMAINING PORTIONS OF THE WALLS AND WINGS FULL HEIGHT FOLLOWED BY ROOF SLAB AND HEADWALLS.

THE RESIDENT ENGINEER SHALL CHECK THE LENGTH OF CULVERT BEFORE STAKING IT OUT TO MAKE CERTAIN THAT IT WILL PROPERLY TAKE CARE OF THE FILL.

DIMENSIONS FOR WING LAYOUT AS WELL AS ADDITIONAL REINFORCING STEEL EMBEDDED IN BARREL ARE SHOWN ON WING SHEET.

TRANSVERSE CONSTRUCTION JOINTS SHALL BE USED IN THE BARREL, SPACED TO LIMIT THE POURS TO A MAXIMUM OF 70 FT. LOCATION OF JOINTS SHALL BE SUBJECT TO APPROVAL OF THE ENGINEER.

AT THE CONTRACTORS OPTION, HE MAY SPLICE THE VERTICAL REINFORCING STEEL IN THE INTERIOR FACE OF EXTERIOR WALL ABOVE LOWER WALL CONSTRUCTION JOINT. THE SPLICE LENGTH SHALL BE AS PROVIDED IN THE SPLICE LENGTH CHART SHOWN ON SHEET 6 OF 7 IN THE PLANS. EXTRA WEIGHT OF STEEL DUE TO THE SPLICES SHALL BE PAID FOR BY THE CONTRACTOR.

FOR CULVERT DIVERSION DETAILS AND PAY ITEM, SEE EROSION CONTROL PLANS.

A 3 FOOT STRIP OF FILTER FABRIC SHALL BE ATTACHED TO THE FILL FACE OF THE WING COVERING THE ENTIRE LENGTH OF THE EXPANSION JOINT.

AT THE CONTRACTOR'S OPTION HE MAY SUBMIT, TO THE ENGINEER FOR APPROVAL, DESIGN AND DETAIL DRAWINGS FOR A PRECAST REINFORCED CONCRETE BOX CULVERT IN LIEU OF THE CAST-IN-PLACE CULVERT SHOWN ON THE PLANS. THE DESIGN SHALL PROVIDE THE SAME SIZE AND NUMBER OF BARRELS AS USED ON THE CAST-IN-PLACE DESIGN. FOR OPTIONAL PRECAST REINFORCED CONCRETE BOX CULVERT, SEE SPECIAL PROVISIONS.

FOR SUBMITTAL OF WORKING DRAWINGS, SEE SPECIAL PROVISIONS.

FOR FALSEWORK AND FORMWORK, SEE SPECIAL PROVISIONS.

FOR CRANE SAFETY, SEE SPECIAL PROVISIONS.

FOR GROUT FOR STRUCTURES, SEE SPECIAL PROVISIONS.

FOUNDATION NOTES

EXCAVATE A MINIMUM OF 1.0 FEET BELOW BEARING ELEVATION AND REPLACE WITH FOUNDATION CONDITIONING MATERIAL PER SECTION 414 OF THE STANDARD SPECIFICATIONS.

OVEREXCAVATE LOOSE/SOFT MATERIAL IF PRESENT TO SUITABLE BEARING MATERIALS AND REPLACE WITH ADDITIONAL CLASS VI FOUNDATION CONDITIONING MATERIAL.

IF SUITABLE BEARING MATERIALS ARE NOT PRESENT AFTER 3.0 FEET OF EXCAVATION, PLACE GEOTEXTILE FOR SOIL STABILIZATION IN ACCORDANCE WITH SECTION 270 OF THE STANDARD SPECIFICATIONS BEFORE REPLACING WITH ADDITIONAL CLASS VI FOUNDATION CONDITIONING MATERIAL.

CONSTRUCT THE REINFORCED BOX CULVERT AT STATION 21+17 -L- WITH 2" OF CAMBER TO ACCOUNT FOR ANTICIPATED SETTLEMENT.

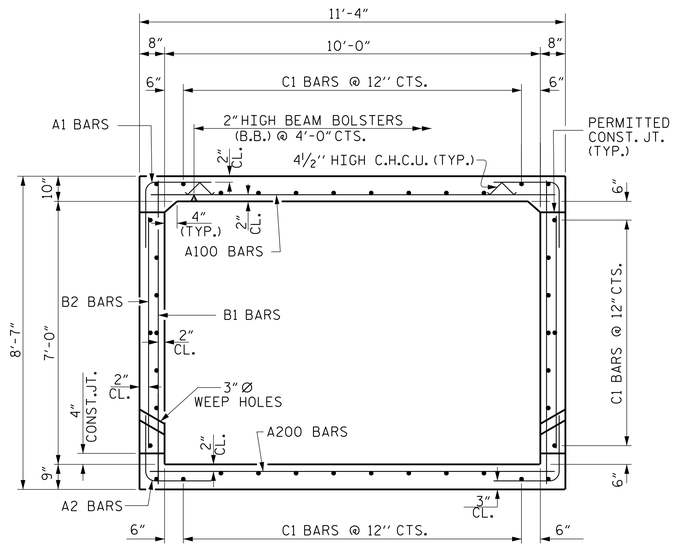

RIGHT ANGLE SECTION OF BARREL

THERE ARE 40 "C" BARS IN SECTION OF BARREL

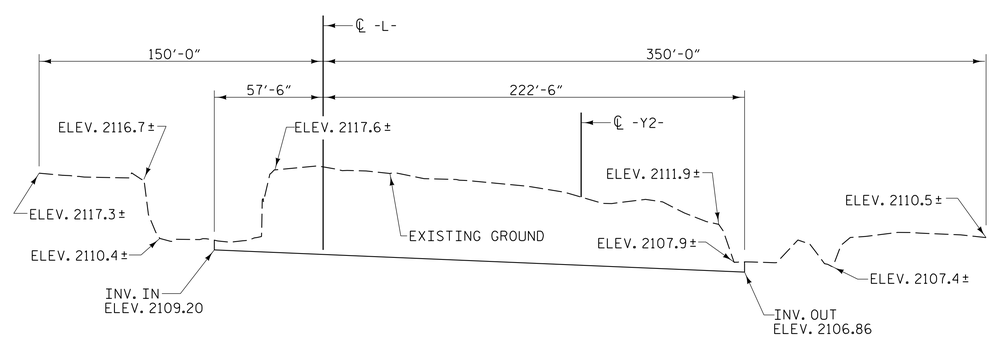

PROFILE ALONG ℄ CULVERT

PROJECT NO. U-5105
HENDERSON COUNTY
STATION: 21+17.00 -L-

SHEET 1 OF 7

STATE OF NORTH CAROLINA
DEPARTMENT OF TRANSPORTATION
RALEIGH

SINGLE BARREL
10 FT. X 7 FT.
CONCRETE BOX CULVERT
106° SKEW

NORTH CAROLINA PROFESSIONAL SEAL ENGINEER KEVIN AUSTIN
DocuSigned by: L. Kevin Austin 72B3720E9F9466...
2/27/2018

PLANS PREPARED BY:
CALYX ENGINEERS + CONSULTANTS
6750 TRYON ROAD
CARY, NC 27518
phone: 919.851.1912
CALYXengineers.com
NC License # F-1333

DOCUMENT NOT CONSIDERED FINAL
UNLESS ALL SIGNATURES COMPLETED

REVISIONS						SHEET NO.
NO.	BY:	DATE:	NO.	BY:	DATE:	C-1
1			3			TOTAL SHEETS
2			4			7

DRAWN BY :	W. B. ALLEN	DATE :	1/17
CHECKED BY :	Z. H. BROWN	DATE :	2/17
DESIGN ENGINEER OF RECORD:	L. K. AUSTIN	DATE :	2/17

2/15/2018 11:33:25 AM R:\Structures\U-5105_SMU_COL_01.dgn